PHYLRICH®

Defining Luxury Since 1959

Widespread Faucet with Cross Handles

501-05

TECHNICAL DETAILS

ADA Compliance: Yes
Deck Thickness Maximum: 2"
Deck Thickness Minimum: 1/8"
Drain Style: Push to Close
Drain Assembly Material: Brass
Fitting Hole Diameter: 1 1/8"
Number of Holes: Three Hole
Number of Handles: Two
Spout Height: 6 3/4"
Installation Type: Deck Mounted
Primary Material: Brass
Valve Material: Ceramic
Flow Restriction: 1.2 gpm
Water Pressure Maximum: 85 PSI
Water Pressure Minimum: 20 PSI
Water Pressure Recommended: 60 PSI

PRODUCT FEATURES

- Style: Traditional
- Collection: Hex Modern
- Temperature Controlled By Handles
- Cross Handles

CODES & STANDARDS

ASME A112.181/ CSA B1251, ASME 112.18.2/ CSA B125.2, ANSI NSF, CEC

WARRANTY
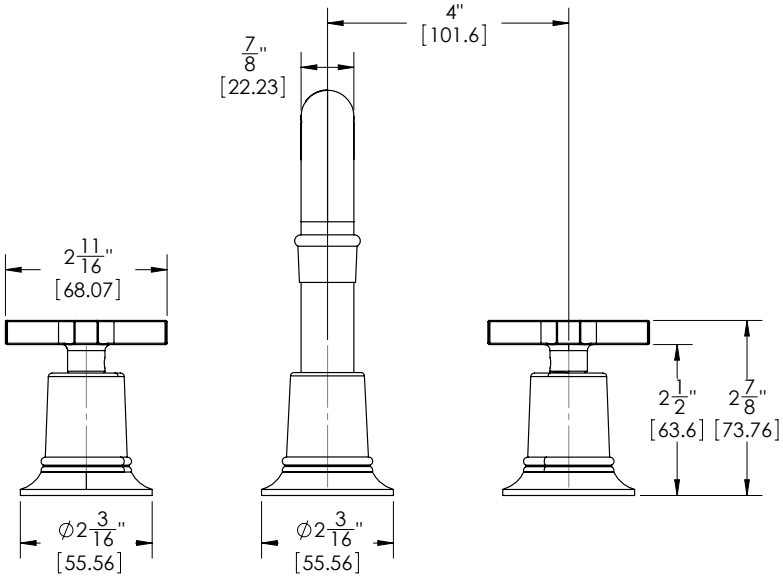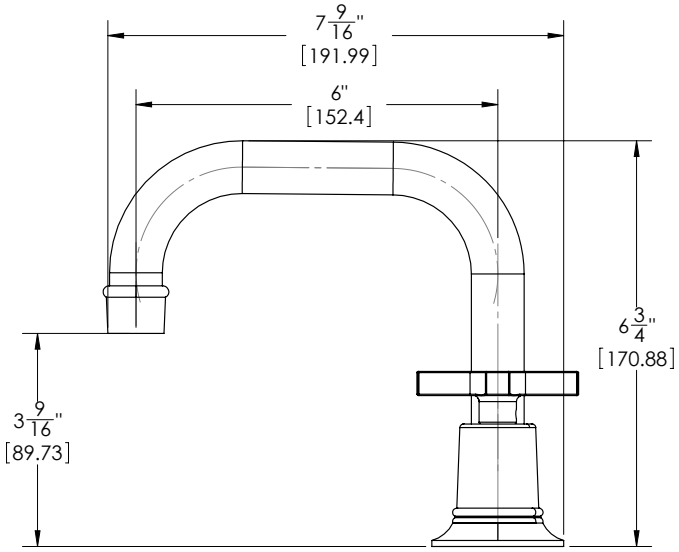
Mechanical Warranty: 10 Years from date of purchase.
Finish Warranty: See catalog for further information.