NOTE(S):

1. PART NUMBER, "/00" DENOTES PART SHALL HAVE FINISH.
2. ~~APPLY NSF COMPLIANT GREASE TO ANY O RING, SEALING JOINTS, AND/OR PIVOTAL POINTS.~~ G
3. ~~APPLY NSF COMPLIANT LOCTITE TO THREADED AREA.~~ L
4. ~~APPLY NSF COMPLIANT REMOVABLE (BLUE) LOCTITE TO THREADED AREA.~~ B
5. ~~SILVER SOLDER JOINTS SHALL BE FULLY WETTED VIA CAPILLARY ACTION AND COMPLETELY NON POROUS.~~ S

A

ITEM NO.	PART NUMBER	DESCRIPTION	QTY.
1	3-107/00	DECK TUB SPOUT, STRIA, ASSY	1
2	3-110/00	ASSY, HANDLE RIBBED CUBE HOT	1
3	3-111/00	ASSY, HANDLE RIBBED CUBE COLD	1
4	92216	HEX L-KEY 1/8" HEX x 2-5/16"L	1

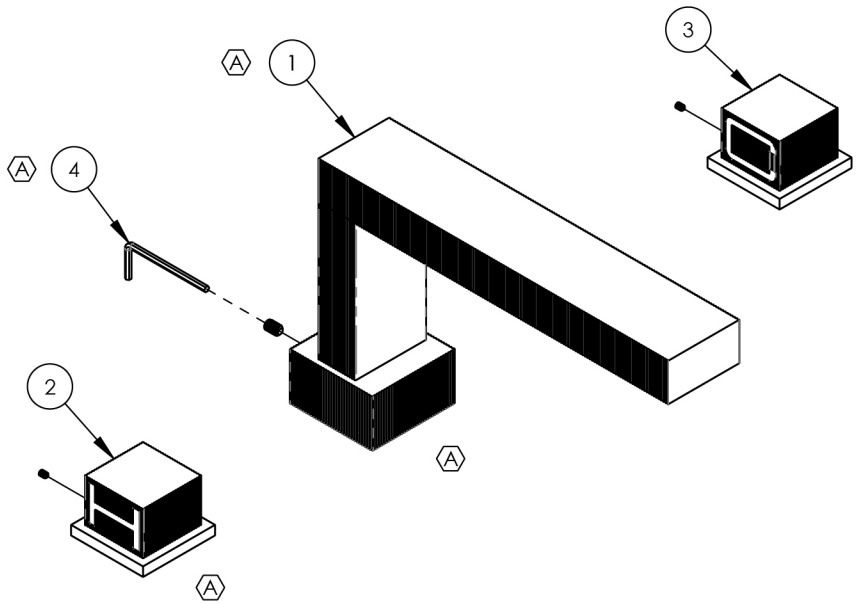

ZONE	REV.	DESCRIPTION	DATE	APPROVED
	A	UPDATED DRAWING	6/7/2024	VA
ALL	A	EXPLODE VIEW, REMOVE SLEEVE MOUNTS & SPOUT ROUGH-IN, ADD CALLOUTS & HEX KEY	6/16/2021	AMM

REVISIONS

1261 LOGAN AVENUE
COSTA MESA, CALIFORNIA 92626

PHONE: 714.361.4800
FAX: 714.617.3120

PHYLRICH®
Defining Luxury Since 1959

PROPRIETARY AND CONFIDENTIAL
THE INFORMATION CONTAINED IN THIS DRAWING IS THE SOLE PROPERTY OF PHYLRICH. ANY REPRODUCTION IN PART OR AS A WHOLE WITHOUT THE WRITTEN PERMISSION OF PHYLRICH IS PROHIBITED.
DO NOT SCALE DRAWING

DECK TUB SET, CUBE, STRIA

SIZE	ASM/PRT NO.	REV
A	291-43/00	A

SCALE: 1:4 | WEIGHT: lbs. | SHEET 1 OF 2