NOTE(S):
1. PART NUMBER, "/00" DENOTES PART SHALL HAVE FINISH.
2. ~~APPLY NSF COMPLIANT GREASE TO ANY O-RING, SEALING JOINTS, AND/OR PIVOTAL POINTS.~~ (G)
3. ~~APPLY NSF COMPLIANT LOCTITE TO THREADED AREA.~~ (L)
4. ~~APPLY NSF COMPLIANT REMOVABLE (BLUE) LOCTITE TO THREADED AREA.~~ (B)
5. ~~SILVER SOLDER JOINTS SHALL BE FULLY WETTED VIA CAPILLARY ACTION AND COMPLETELY NON POROUS.~~ (S)
6. ASSEMBLY USES CHECK VALVE "31.4153.0" (10672). (D)

ITEM NO.	PART NUMBER	DESCRIPTION	QTY.
1	3-596/00	ASSY, LEVER HANDLE, DIAMA	3
2	3-592/00	DECK TUB SPOUT, DIAMA, ASSY	1
3	3-600/00	HAND SHOWER, SQUARE, MODERN	1
4	3-049/00	ASSY, HOSE KIT, HANDSHOWER	1
5	92216	HEX L-KEY 1/8" HEX x 2-5/16"L	1
6	3-217/00	ESCUTCHEON BASE, HANDSHOWER, DIAMA	1
6.1	11763/00	ESCUTCHEON BASE, DECK TUB, HANDSHOWER, DIAMA	1
6.2	90135	O-RING, 1-15/16"ID X 3/32"THK, AS-568-135	1
6.3	92173	SET SCREW, CUP PT, 1/4"-20 X 3/8" L	1
7	11216/00	ADAPTER, HANDHELD MIX SERIES	1

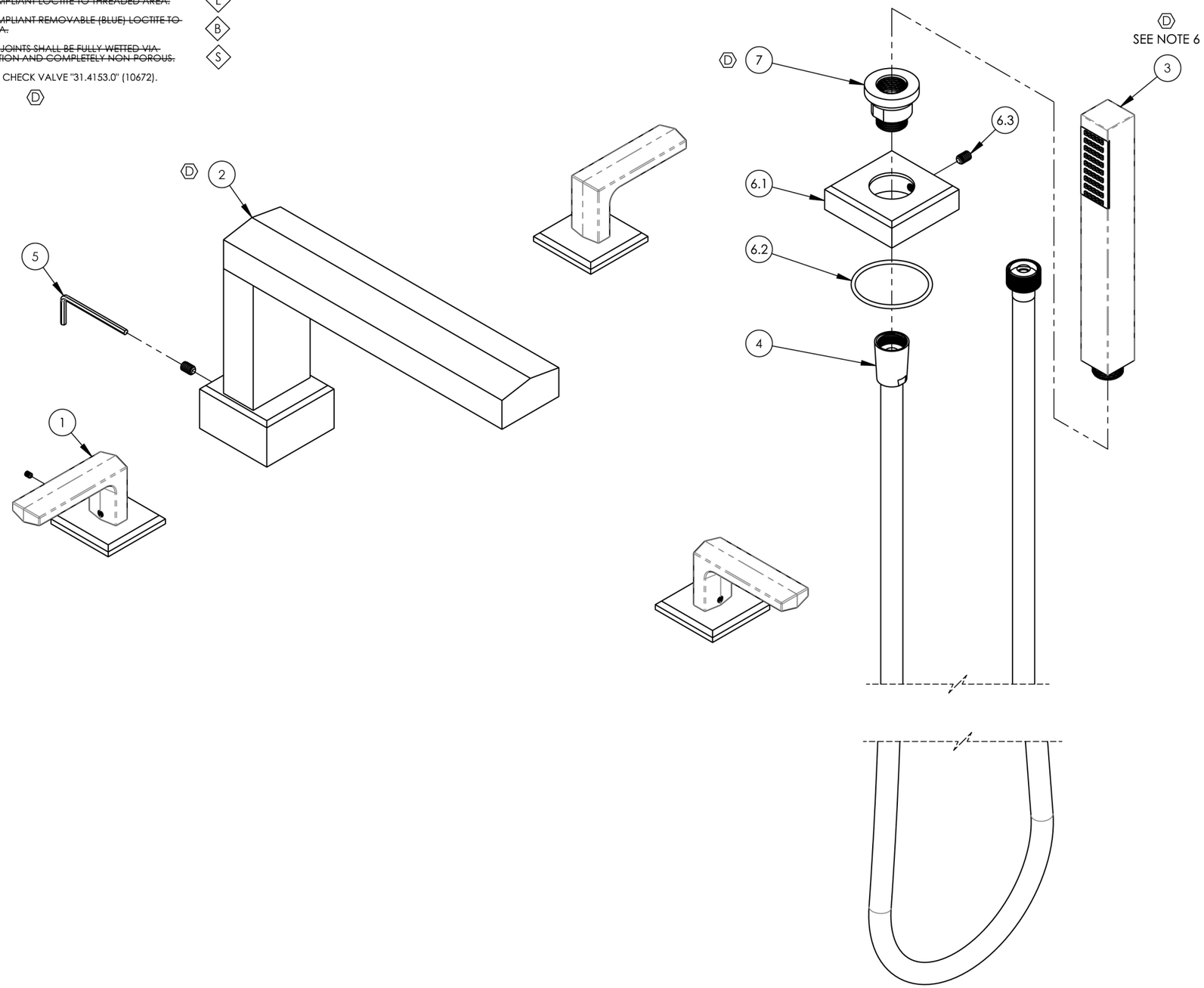

ZONE	REV.	DESCRIPTION	DATE	APPROVED
	D	UPDATED DRAWING	6/5/2024	VA
ALL	D	ADD CHECK VALVE CALLOUT TO NOTES, UPDATED ADAPTER FOR HANDSHOWER	2/10/2023	LFV

REVISIONS

1261 LOGAN AVENUE
COSTA MESA, CALIFORNIA 92626
PHONE: 714.361.4800
FAX: 714.617.3120

PHYLRICH®
Defining Luxury Since 1959

PROPRIETARY AND CONFIDENTIAL
THE INFORMATION CONTAINED IN THIS DRAWING IS THE SOLE PROPERTY OF PHYLRICH. ANY REPRODUCTION IN PART OR AS A WHOLE WITHOUT THE WRITTEN PERMISSION OF PHYLRICH IS PROHIBITED.

DO NOT SCALE DRAWING

DECK TUB SET W/ HANDSHOWER, LEVER, DIAMA

SIZE	ASM/PRT NO.	REV
B	184-49/00	D

SCALE: 1:3 | WEIGHT: lbs. | SHEET 1 OF 2