PHYLRICH®

Defining Luxury Since 1959

Deck Tub Set w/ Hand Shower

183-48

TECHNICAL DETAILS

ADA Compliance: No
Deck Thickness Maximum: 2"
Deck Thickness Minimum: 1/8"
Fitting Hole Diameter: 1 1/8"
Number of Holes: Five Hole
Number of Handles: Three
Hand Shower Flow Restriction: 1.8 GPM
Handle Spread Maximum: 12"
Handle Spread Minimum: 8"
Handle Turn Angle: Quarter Turn
Spout Reach: 9"
Spout Height: 6 1/2"
Inlet Connection Type: Male 3/4" NPT
Installation Type: Deck Mounted
Primary Material: Brass
Valve Material: Ceramic
Spout Flow Restriction: Full Flow
Hand Shower Flow Restriction: 1.8 GPM
Water Pressure Maximum: 85 PSI
Water Pressure Minimum: 20 PSI
Water Pressure Recommended: 60 PSI

PRODUCT FEATURES

- Style: Contemporary
- Collection: Rond
- Temperature Controlled By Handles
- Blade Handles

CODES & STANDARDS

ASME A112.181/ CSA B1251, ASME 112.18.2/ CSA B125.2, ANSI NSF, CEC, Watersense 61 Sect. 9, State of MA.

WARRANTY
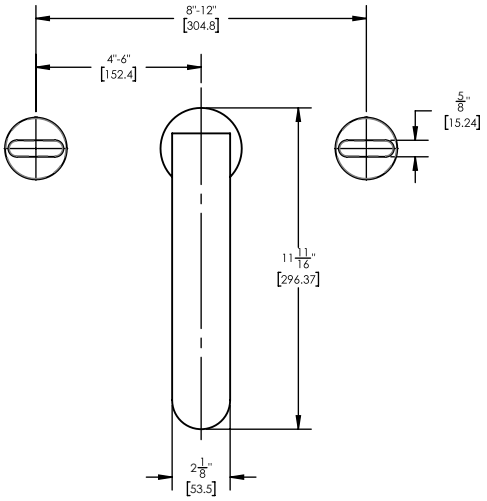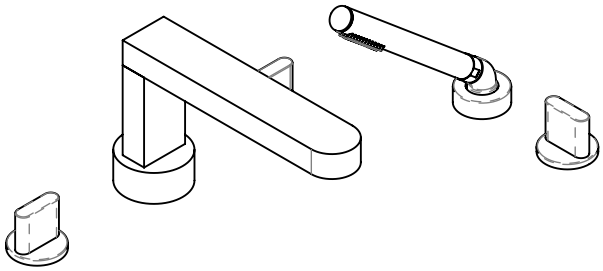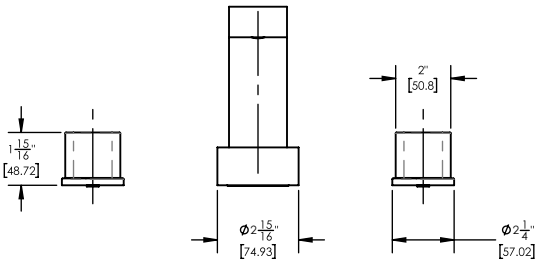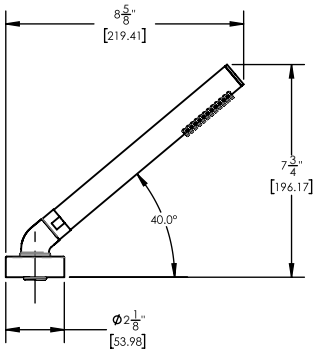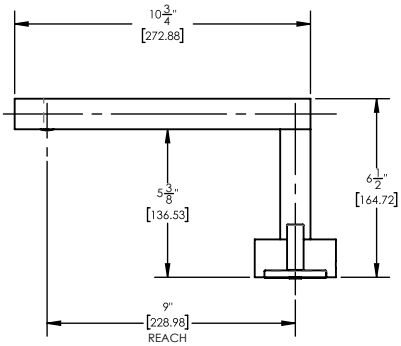
Mechanical Warranty: 10 Years from date of purchase.
finish warranty: see catalog for further information.