NOTE(S):
1. PART NUMBER, "/00" DENOTES PART SHALL HAVE FINISH.
2. APPLY NSF COMPLIANT GREASE TO ANY O-RING, SEALING JOINTS, AND/OR PIVOTAL POINTS. (G)
3. APPLY NSF COMPLIANT LOCTITE TO THREADED AREA. (L)

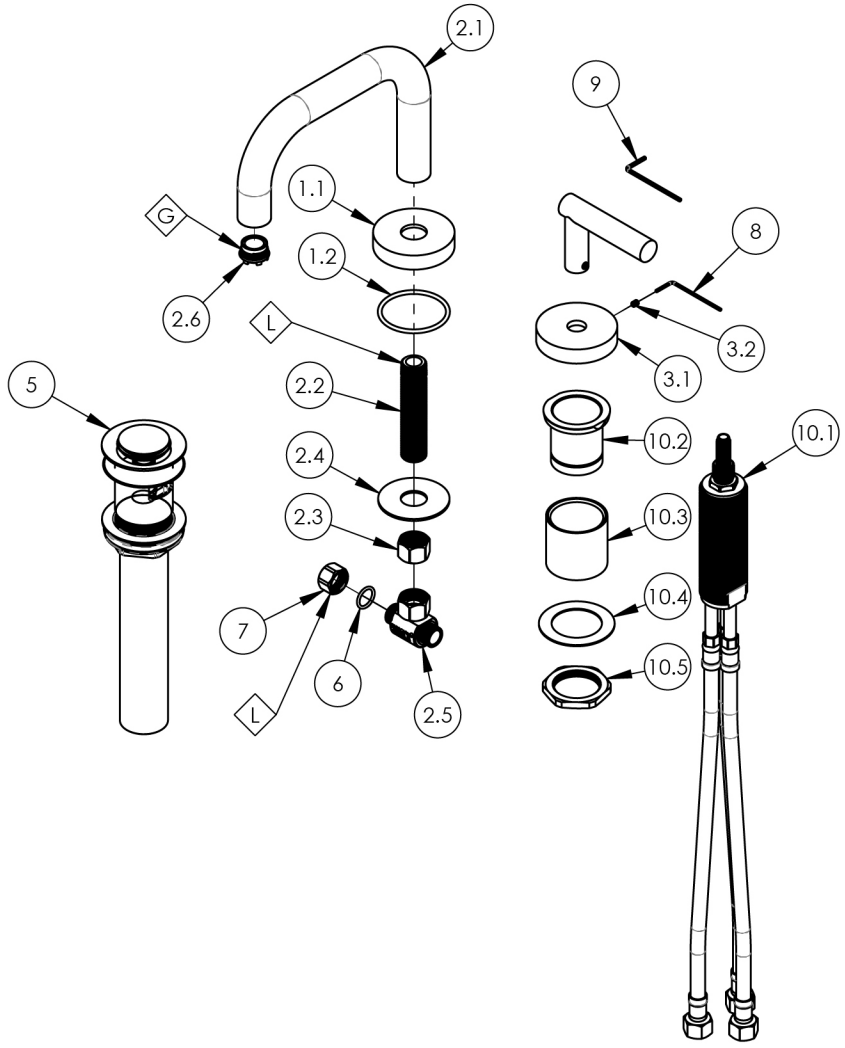

ITEM NO.	PART NUMBER	DESCRIPTION	QTY.
1	3-575/00	ESCUTCHEON WITH SEAL, SPOUT, TRANSITION	1
1.1	11705/00	ESCUTCHEON, SPOUT	1
1.2	90131	O-RING, 1-11/16ID X 3/32THK, AS-568-131	1
2	3-574/00	SPOUT ASSEMBLY, WIDESPREAD, SQUARE	1
2.1	11704/00	SPOUT, SQUARE, WIDESPREAD	1
2.2	10745	THREAD ALL, 3/8"-18 NPSM	1
2.3	10746	NUT, 3/8"-18 NPSL	1
2.4	92174	WASHER, 1.860 O.D X .690 I.D	1
2.5	1-112	TEE VALVE, 3/8" NPSM X 3/8" COMPRESSION	1
2.6	11428	AERATOR, CACHE TJ, 1.2GPM PCA PINK, 43.2260.450	1
3	3-590/00	ESCUTCHEON W/ SET SCREW, TRANSITION	1
3.1	11703/00	ESCUTCHEON, HANDLE	1
3.2	92005	SET SCREW, CUP PT 6-32 UNC THREAD 3/16"L	1
4	3-581/00	HANDLE LEVER W/ SET SCREW, TRANSITION	1
4.1	92223	SCREW, SOCKET HD. SS, 8-32 X 5/8"L	1
4.2	92163	SET SCREW, CUP PT 8-32 X 1/8"L	1
4.3	11706/00	HUB , LEVER HANDLE	1
4.4	11707/00	HANDLE, LEVER	1
5	3-545/00	BRASS PUSH TYPE DRAIN, W/ OVERFLOW & SMALL PLUG	1
6	90014	O-RING, 1/2"ID X 5/8"OD X 1/16"THK, AS-568-014	1
7	92492	CAP NUT, 3/8" COMPRESSION	1
8	92246	HEX KEY 1/16, FOR 6-32 SET SCREW	1
9	92021	HEX KEY 5/64, FOR 8-32 SET SCREW	1
10	2-580	VALVE KIT, FLUSH MOUNT, SINGLE HANDLE LAV	1
10.1	1-054	VALVE, DECK MOUNTED SINGLE HANDLE LAV DROP-IN	1
10.2	11077	SLEEVE MOUNT, DECK (ROMAN) TUB	1
10.3	92180	EXTENSION SLEEVE, WIDESPREAD	1
10.4	92138	BRASS WASHER, THIN	1
10.5	92313	HEX NUT, 1-1/4"-20 THREAD	1

ZONE	REV.	DESCRIPTION	DATE	APPROVED
		REVISIONS		

1261 LOGAN AVENUE
COSTA MESA, CALIFORNIA 92626

PHONE: 714.361.4800
FAX: 714.617.3120

PHYLRICH®
Defining Luxury Since 1959

PROPRIETARY AND CONFIDENTIAL
THE INFORMATION CONTAINED IN THIS DRAWING IS THE SOLE PROPERTY OF PHYLRICH. ANY REPRODUCTION IN PART OR AS A WHOLE WITHOUT THE WRITTEN PERMISSION OF PHYLRICH IS PROHIBITED.

DO NOT SCALE DRAWING

WIDESPREAD LAV, LOW SPOUT, SINGLE LEVER HANDLE, TRANSITION

SIZE	ASM/PRT NO.	REV
A	120-08/00	-

SCALE: 1:12 | WEIGHT: lbs. | SHEET 1 OF 2