ITEM NO.	PART NUMBER	DESCRIPTION	QTY.
1	11053/00	POST, TP HOLDER HEX MODERN 501 SERIES	2
2	11732/00	ESCUTCHEON, TRANSITIONAL	2
3	2-103	MOUNTING KIT WITH ADJUSTABLE THREADED PIN	2
3.1	11050	MOUNTING KIT, WALL FLANGE	1
3.2	92234	SCREW FOR WOOD, PHIL, NO. 8 X 1-1/2"L	2
3.3	92235	ANCHOR FOR DRYWALL, TWIST-ACTION NO. 6-8 SIZE	2
4	3-055/00	TP ROLL SPRING HOLDER	1
4.1	10709	TP HOLDER FOR SPRING LEFT	1
4.2	10710	TP HOLDER FOR SPRING RIGHT	1
4.3	92062	SPRING FOR TP HOLDER	1
5	92008	SET SCREW, CUP POINT 8-32, 3/16" L.	2
6	P39001	HEX KEY 5/64, FOR 8-32 SET SCREW	1

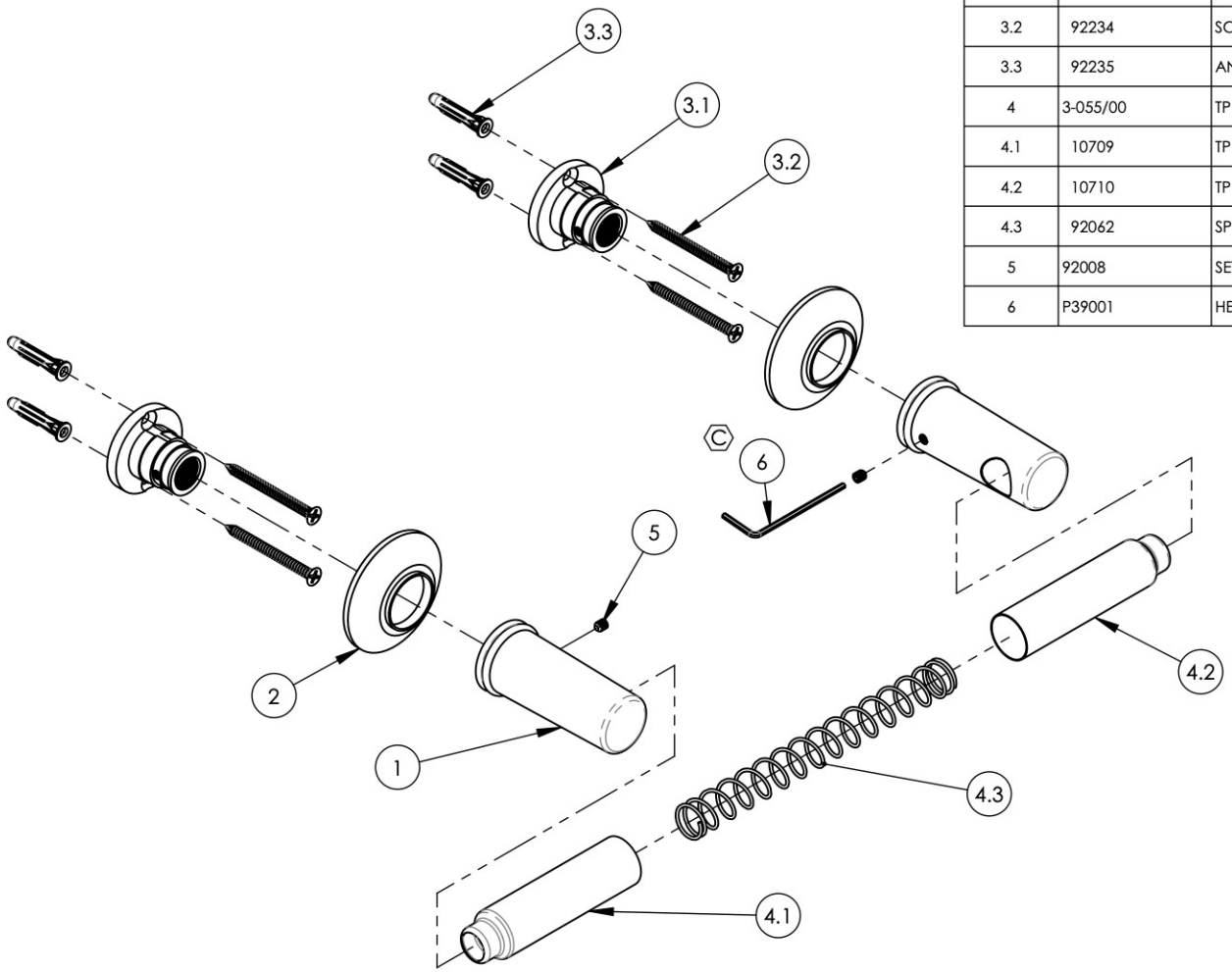

ZONE	REV.	DESCRIPTION	DATE	APPROVED
ALL	C	UPDATE TEMPLATE, DWG NAME, ADD HEX KEY	12/10/2019	AMM

REVISIONS

1261 LOGAN AVENUE
COSTA MESA, CALIFORNIA 92626

PHONE: 714.361.4800
FAX: 714.617.3120

PHYLRICH®

Defining Luxury Since 1959

PROPRIETARY AND CONFIDENTIAL

THE INFORMATION CONTAINED IN THIS DRAWING IS THE SOLE PROPERTY OF PHYLRICH. ANY REPRODUCTION IN PART OR AS A WHOLE WITHOUT THE WRITTEN PERMISSION OF PHYLRICH IS PROHIBITED.

-	-
-	-
-	-
NEXT ASSY	USED ON
APPLICATION	
MATERIAL	
FINISH	

DO NOT SCALE DRAWING

INTERPRET GEOMETRIC DIMENSIONING & TOLERANCING IN ACCORDANCE WITH ASME Y14.5-2009 & ASME Y14.41-2003 STANDARDS. UNLESS OTHERWISE SPECIFIED, DIMENSIONS ARE IN INCHES. TOLERANCES ARE:

FRACTIONS ±1/16"
DECIMALS X.X: ±.1 X.XX: ±.01 X.XXX: ±.005
ANGULAR ±2°

	NAME	DATE
DRAWN	CA	7/23/2013
CHECKED		

ACCESSORIES, PAPER HOLDER, HEX MODERN

SIZE	ASM/PRT NO.	REV
A	501-73/00	C

SCALE: 1:3 | WEIGHT: lbs. | SHEET 1 OF 2