Wall Tub Set w/ Lever Handles

120-57-14

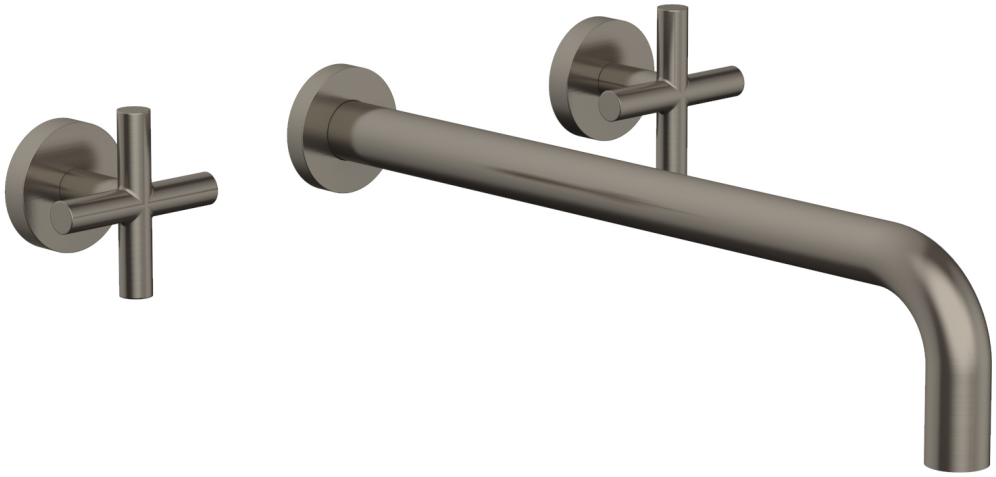

▪ PRODUCT FEATURES

- Style: Transitional
- Collection: Transition
- Temperature Controlled By Handles
- Lever Handles
-
-

▪ TECHNICAL DETAILS

ADA Compliance: No
Drain Assembly Material: Brass
Fitting Hole Diameter: 1 1/8"
Number of Holes: Three Hole
Number of Handles: Two
Handle Turn Angle: Quarter Turn
Spout Reach: 14"
Installation Type: Wall Mounted
Primary Material: Brass
Valve Material: Ceramic
Flow Restriction: Full Flow
Water Pressure Maximum: 85 PSI
Water Pressure Minimum: 20 PSI
Water Pressure Recommended: 60 PSI

▪ PRODUCT DIMENSIONS

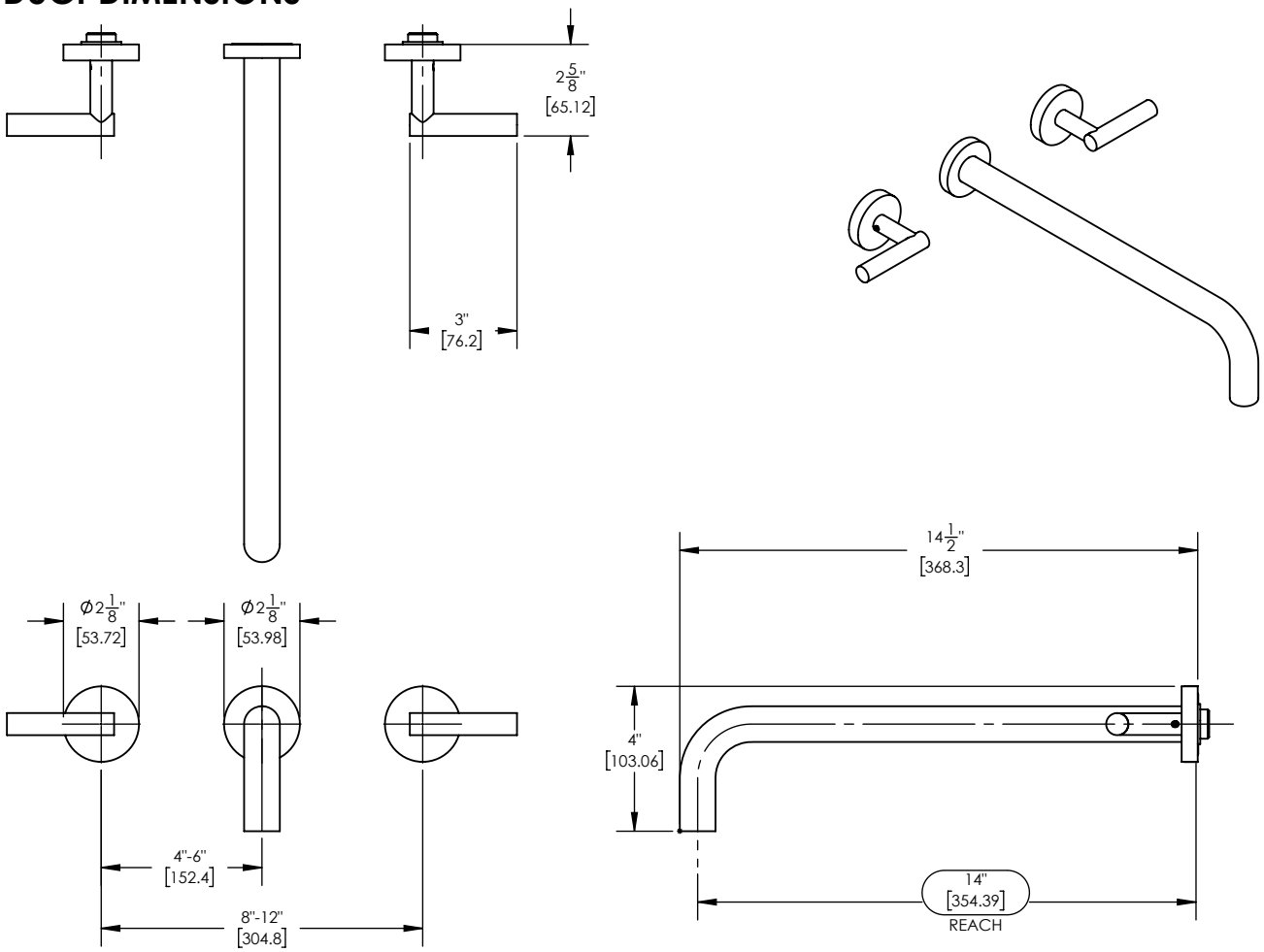

www. phylrich.com

1261 Logan Avenue, Costa Mesa, California 92626.
Phone: 714.361.4800 Fax: 714.617.3120

CODES & STANDARDS

ASME A112.181/ CSA B1251, ASME 112.18.2/ CSA B125.2, ANSI NSF, CEC

WARRANTY

Mechanical Warranty: 10 Years from date of purchase.
Finish Warranty: See catalog for further information.